RAMMER R05P

PERFORMANCE LINE

PROVEN TECHNOLOGY

- VIBRATION AND SOUND SUPPRESSED
- FULLY ENCLOSED, HEAVY DUTY HOUSING
- EXCELLENT POWER-TO-WEIGHT RATIO
- NITROGEN PISTON ACCUMULATOR
- EASY TO SERVICE

UNBEATABLE PERFORMANCE

The new Rammer Performance Line hammers are your everyday solution for a wide range of breaking demands. Designed with proven Rammer features and standards, these Rammer Performance Line hammers offer more than just excellent power-to-weight ratio, they bring the quality reassurance that only a true Rammer hammer can bring.

Read more about the product from www.rammer.com

Rammer®

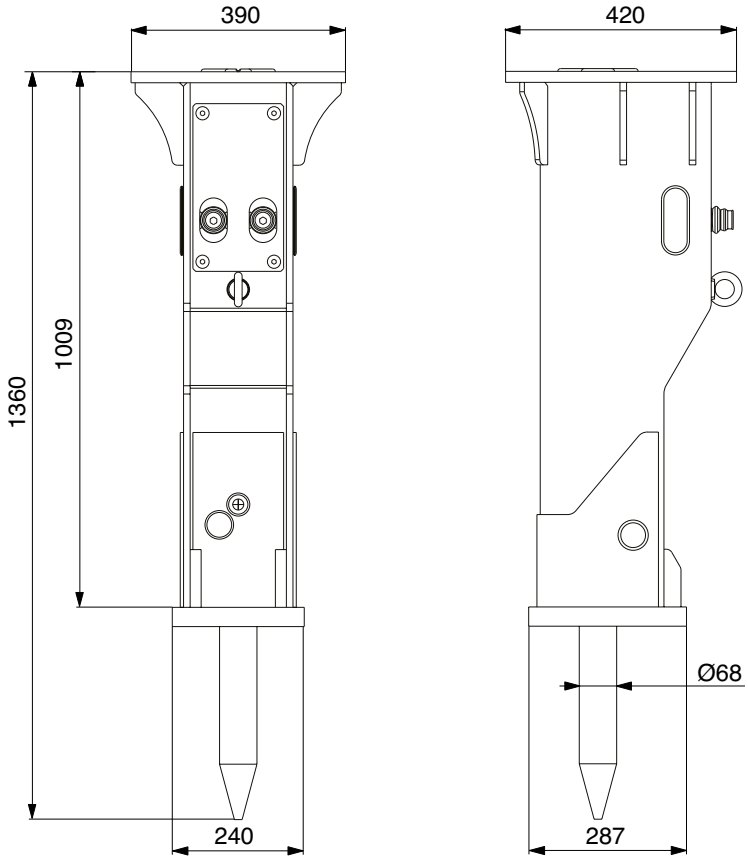

RAMMER BOLT PATTERN

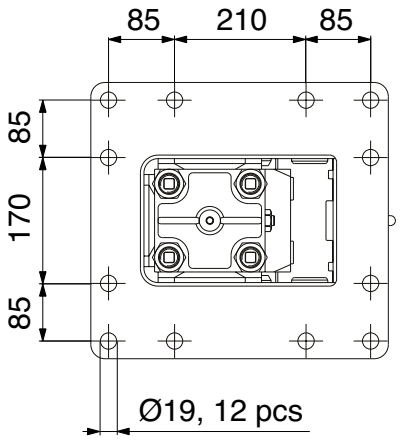

SPECIFICATIONS

Min. working weight, kg (lb)	335 (739)
Tool diameter, mm (in)	68 (2.68)
Oil flow range, l/min (gal/min)	35 - 70 (9 - 18)
Impact rate, bpm	400 - 1050
Operating pressure, bar (psi)	110 - 140 (1 595 - 2 031)
Pressure relief, min, bar (psi)	200 (2 901)
Pressure relief, max, bar (psi)	220 (3 191)
Back pressure, max, bar (psi)	15 (218)
Input power, kW (hp)	18 (24)
Miniexcavator range, ton (lb)	4.0 - 7.5 (8 818 - 16 535)
Skid steer range, ton (lb)	3.0 - 5.2 (6 614 - 11 464)
Noise level measured sound power level, LWA, dB(A)	115
Noise level quaranteed sound power level, LWA, dB(A)	119

TOOLS

Moil point tool

Chisel tool

Blunt tool

Pyramid tool

Specifications are subject to change without notice